YT-8020P-C2 Lens Specification

1.SENSOR SIZE		1/2.8(IMX327)
2.WAVELENGTH	λ=	400~1100
3.FOCAL LENGTH (EFL)	f=	4.0mm
4.F/NO (INFINITE)	F/NO=	1.6
5.BACK FOCAL LENGTH	BFL=	4.79mm
6.FLANGE BACK LENGTH	FB=	4.37mm
7.FIELD OF VIEW(D)	=	100°
FIELD OF VIEW(H)	=	83°
FIELD OF VIEW(V)	=	44°
8.TV DISTORTION	<	-10%
9.THREAD SIZE	=	M12xP0.5
10.RELATIVE ILLUMINATION	>	50%(⌀6.4)
12.Recent Camera Distance	=	0.4M

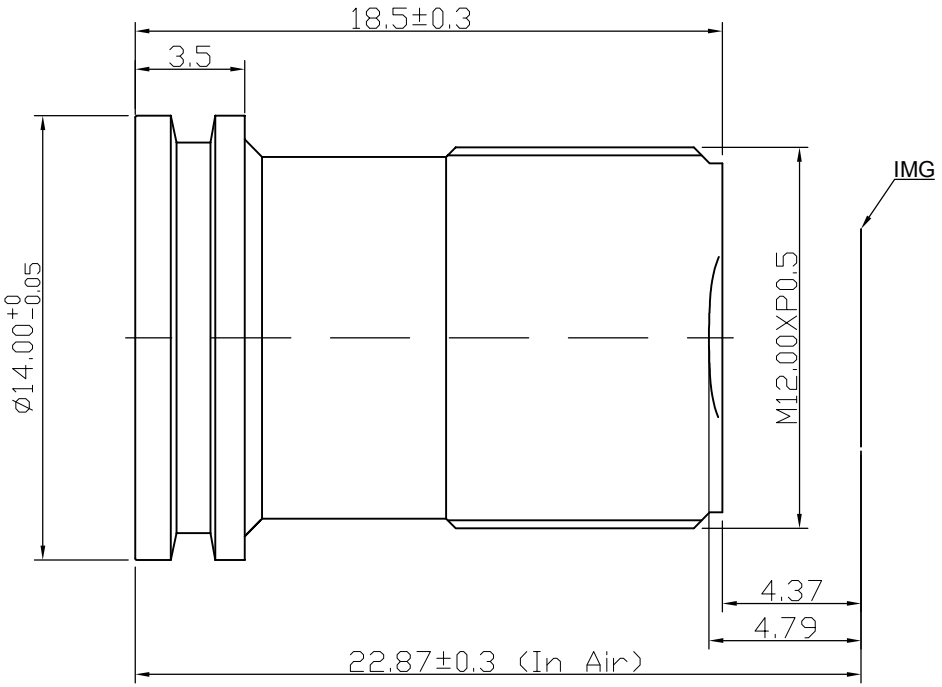

REV	DESCRIPTION	DATE	NAME
①			
②			
③			
④			

NAME	YT-8020P-C2-SPEC	DATE	2024.03.16	DRAWN	黄光深
VIEW	REV 00	SCALE		CHECKED	
Wintop Optics		BORDER	A4	APPROVED	